Part 2: Evaluation and Modification of Open Web Steel Joists and Joist Girders

OCTOBER 19, 2016

Copyright © 2016 Steel Joist Institute. All Rights Reserved.

Presented by:

Bruce Brothersen, P.E., Engineering Manager, Vulcraft

Walter Worthley, P.E., Chief Engineer, Valley Joist

Learning Objectives

- Give several methods and practices to modify existing joists to increase the load carrying capacity
- Provide details which are commonly used to increase the load carrying capacity of a joist component
- Address the realistic limits of modifications, with alternatives when modifications are not possible
- Show examples where the joist lengths are altered

Evaluation & Modification Webinar

This is part two of a two part series. Part 1 discussed and demonstrated the methods to evaluate existing open web steel joists and Joist Girders for revised loading conditions. Part 2 of this series will discuss and demonstrate methods to modify open web steel joists and Joist Girders to increase the load carrying capacity or repair damage. This webinar parallels the Steel Joist Institute publication, Technical Digest No. 12 "Evaluation and Modification of Open Web Steel Joists and Joist Girders."

Introduction

- Commercial manufacturing of open web steel joists began in 1923
- The Steel Joist Institute was formed in 1928
  - Open Web Steel Joist use has continued to grow
  - There are millions of Open Web Steel Joists in service

Introduction (cont'd)

Evaluation and Modification of joists are required for many reasons

- **Building renovations**
- **Addition of roof top units**
- **Conveyor loads**
- **Field deviations – Dimensional changes**
- **Other changes not contemplated in the original design**
- **Damage to the joists**

New Resource Available:

SJI Technical Digest No. 12
Evaluation and Modification of Open-Web Steel Joists and Joist Girders

- **Present procedures**
- **Suggest details for modification or strengthening**

SJI Technical Digest No. 12

Evaluation and Modification of Open-Web Steel Joists and Joist Girders

Price $30.00

Order From:
www.steeljoist.org



SJI Technical Digest No. 12

Background	
Glossary	
Chapter 1	Evaluations of Existing Joist Strength
Chapter 2	Methods of Supporting Additional Load
Chapter 3	Design Approaches For Strengthening Joists
Chapter 4	Design Approaches For Modifying Joists – Shortening And Lengthening
Chapter 5	Other Considerations
Chapter 6	Summary
References	
Appendix A	Joist Investigation Form
Appendix B	Common Properties of Equal Leg Angles With Leg Sizes 2 In. Or Less

Summary of Part 1

- Reviewed identification of the existing joists
- Reviewed design assumptions for existing joists
- Reviewed an example where additional concentrated loads were added to an existing joist
- Reviewed methods of specifying loads to minimize future repairs
- Reviewed the length and placement of welds
- Reviewed the risk of repair verses the in place capacity of a joist

Joist Investigation Form

Steel Joist Institute Assistance

- **Fill out the Form Online**
- **Download from SJI website**
  - https://steeljoist.org/joist-investigation-form/
  - **Return to SJI office or manufacturer for assistance**
- **Appendix A of TD 12**



STEEL JOIST INSTITUTE

steeljoist.org

Please complete the following form and email it to sji@steeljoist.org or fax it to 843-407-4044.

Date: _____

Name: _____

Company: _____

Phone: _____ Fax: _____ Cell: _____

Email: _____

Project Details

Jobsite Location City/State: _____

Project Name: _____

Why are you requesting this information? Select all that apply.

☐ Evaluation ☐ Field or erection problem ☐ Inspection ☐ Legal issue
☐ New construction ☐ Rehabilitation or reuse ☐ Seismic retrofit
☐ Structural problem ☐ Other, describe _____

Supplementary Information

What year was the building constructed or approximate age of the structure? _____

Who was the joist manufacturer? _____

Is there a tag on the joist? ☐ No ☐ Yes, provide tag information _____

What type of trusses are the joists? ☐ Warren ☐ Modified Warren ☐ Pratt ☐ Other, describe or sketch _____

What are the joists used for? ☐ Roof loading ☐ Floor loading

234 W. Cheves Street • Florence, SC 29501 • T (843) 407-4091 • F (843) 407-4044

Analysis Considerations

To Analyze Joist Capacity

- **Pinned connections are assumed for web members**
- **Specifications for K-Series joists permit bending to be neglected when**
  - **Panel point spacing does not exceed 24 inches**
  - **The applied loads are uniform**
- **A first-order analysis is used**
- **The SJI permits eccentricities to be neglected when**
  - **For K-Series, the "3/4 Rule" is followed - Spec 4.5©**
  - **For all other joist series, when the eccentricity "… does not exceed the distance between the centroid and back of the chord"**

Reinforcing vs. Replacement

Considerations

- **Cost**
- **Time**
- **Difficulty of Repair**
- **Effectiveness of Repair**
- **Skill of workman**

Field Repairs

- **Poor field workmanship is a concern**



Field Repairs

- **Field workmanship can weaken the joist**



Adding New Joists or Beams

Considerations

- **Existing interferences**
  - **Piping, electrical conduits, other interferences**
  - **Removing or relocating could be at a greater expense than reinforcement**
- **Camber**
  - **May need to reduce camber in new joists**
  - **Joists can be ordered with shallower seat depths and then shimmed in the field**
  - **The joist can be supplied with a splice so two individual pieces can be installed and bolted at the center**
- **Lateral Stability of the joist top chord**
  - **Shoot pins through the chord, decking, and slab**
  - **Rely on bridging to provide lateral support**

Chapter 3: Design Approaches for Strengthening Joists

Two Design Approaches to Reinforce Individual Joist Members

- **Approach I**
  - **Ignore the existing member strength**
  - **Simply design the reinforcing members to carry the total load**

- **Approach II**
  - **Make use of the strength of the existing member**

Design Approaches for Strengthening Individual Joist Members

Considerations for Either Approach

- Cost of materials for reinforcement is insignificant to the cost of labor
- Safest to reinforce the joist in the shored position
  - Welding can generate enough heat to cause temporary loss of steel strength
  - Transverse field welds should be avoided
- Best to reinforce the members with dead and live loads removed
  - Jack the joist up to a calculated deflection
- Pay close attention to eccentricities caused by the reinforcing

Design Approaches for Strengthening Individual Joist Members

For Approach II

- **It is assumed that applied forces are distributed between the existing member and the reinforcing member**
  - **Direct proportion to their areas**
- **If joists are shored to remove existing load**
  - **The preload is then zero**
- **If joists are not shored**
  - **Preload can be calculated based on load present at the time of reinforcing**
- **Shoring and jack placement is the responsibility of the Specifying Professional**

Design of Reinforcing for Tension Members (Approach II)

1. **Determine the total area required, A_{tr}**

$$A_{tr} = \frac{\left(P_t - P_p\right)}{\left(P_o - P_p\right)} A_e$$

Where,

A_{tr} = Total area required (existing member and required reinforcing), in^2
A_e = Area of existing member, in^2
P_0 = Original force for the existing member (original design force), kips.
P_p = Preload in the existing member at the time of reinforcing, kips.
P_t = Required strength, kips.

Assumes existing steel and reinforcing steel both have equal yield strength

Design of Reinforcing for Tension Members (Approach II)

Design procedures when the yield strengths of the two materials are not equal

- **Assume both materials have the same yield strength as that of the lowest material used**
  - **Most conservative method**

- **Use the actual yield strength of each material in the design**
  - **Allow each material to achieve the full allowed stress level**

Design of Reinforcing for Tension Members (Approach II)

2. **Determine required area of reinforcing, A_r**

$$A_r = A_{tr} - A_e$$

3. **The force in the reinforcing member equals**

$$P_r = \left(\frac{A_{fr}}{A_t}\right)\left(P_t - P_p\right)$$

Where,

A_{fr} = Area of the furnished reinforcing, in^2

A_t = Area of existing member plus the area of the furnished reinforcing, in^2

Design of Reinforcing for Compression Members (Approach II)

1. Select a trial reinforcing member.
2. Check the buckling strength of the composite member.
   - If a preload force exists, determine the magnitude of the compressive stress in the existing member due to the preload, f_p
   - F_{ye} = minimum yield stress of existing member, ksi
   - For the buckling check, use F_y as the minimum of
   - ($F_{ye} - f_p$) or F_y
3. Design the weld for the reinforcing member. The force in the weld is

$$P_{rw} = \left(\frac{A_{fr}}{A_t}\right)\left(P_t - P_p\right)$$

Type of Chord Members

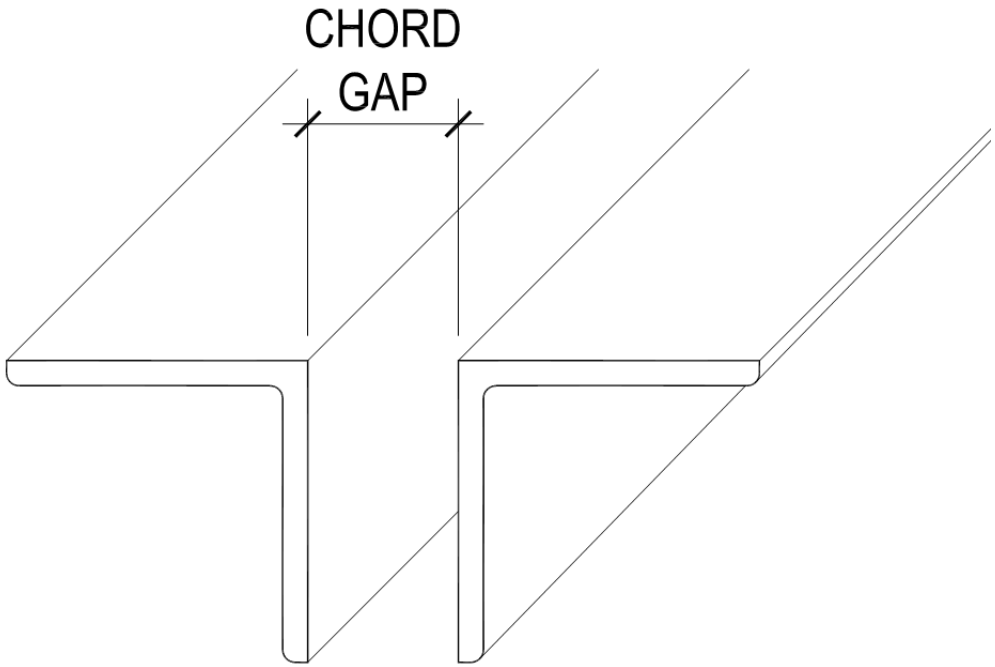

Chord Reinforcement

Typical reinforcement details

- **Top chord**
  - **More difficult to reinforce since the floor or roof deck is usually in place**
  - **Overhead welds may be required**

- **Bottom chord**
  - **Easier to access**
  - **No overhead welds required**

Chord Reinforcement

- **Top Chord Reinforcement – Rods**

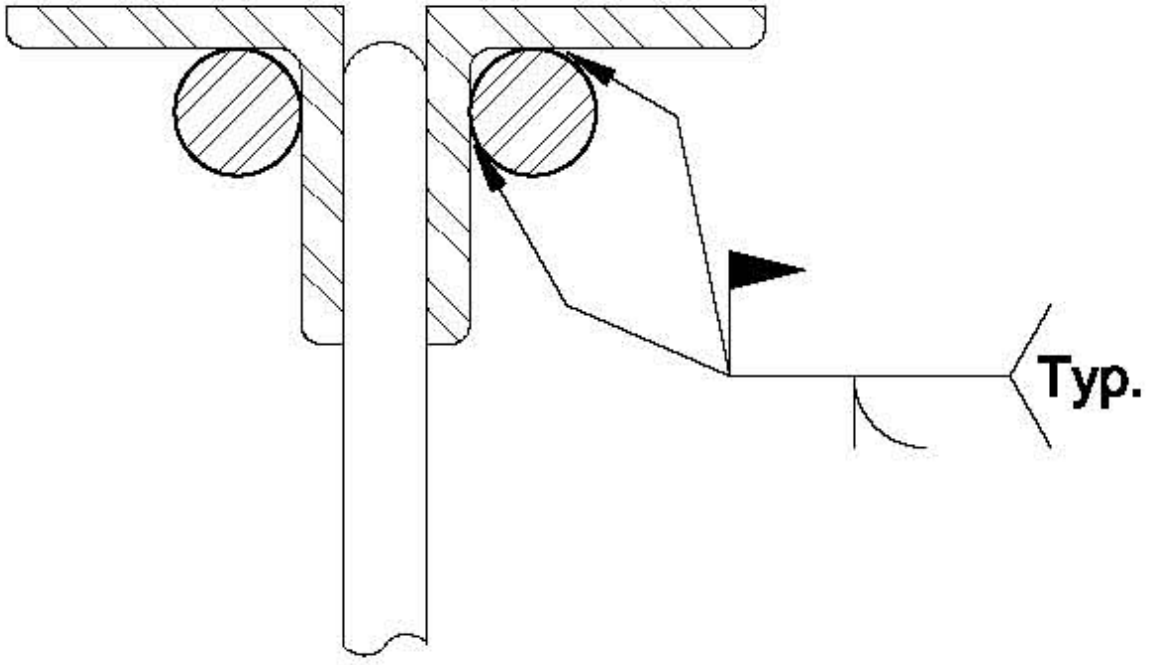

Chord Reinforcement

- **Top Chord Reinforcement – Plates**

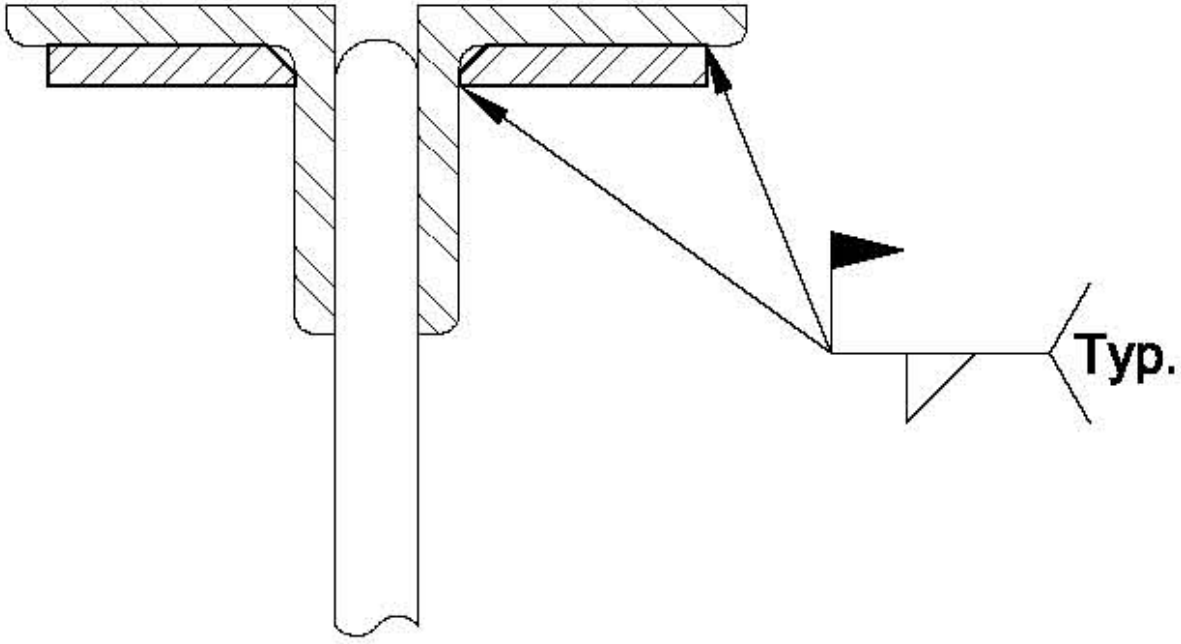

Chord Reinforcement

- **Top Chord Reinforcement – Angles**

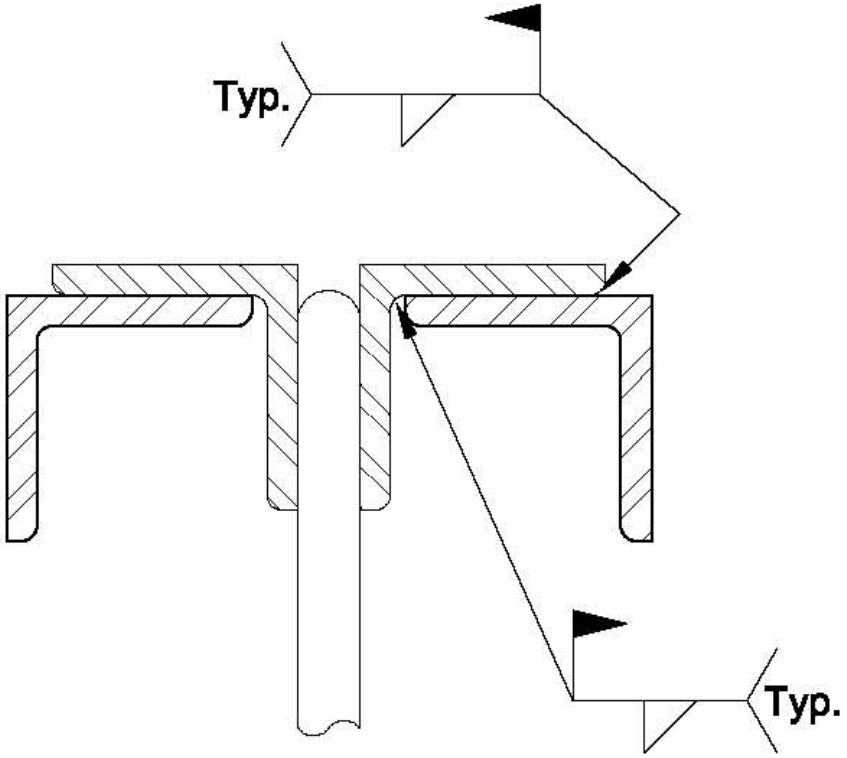

Chord Reinforcement

- **Top Chord Reinforcement – Angles**

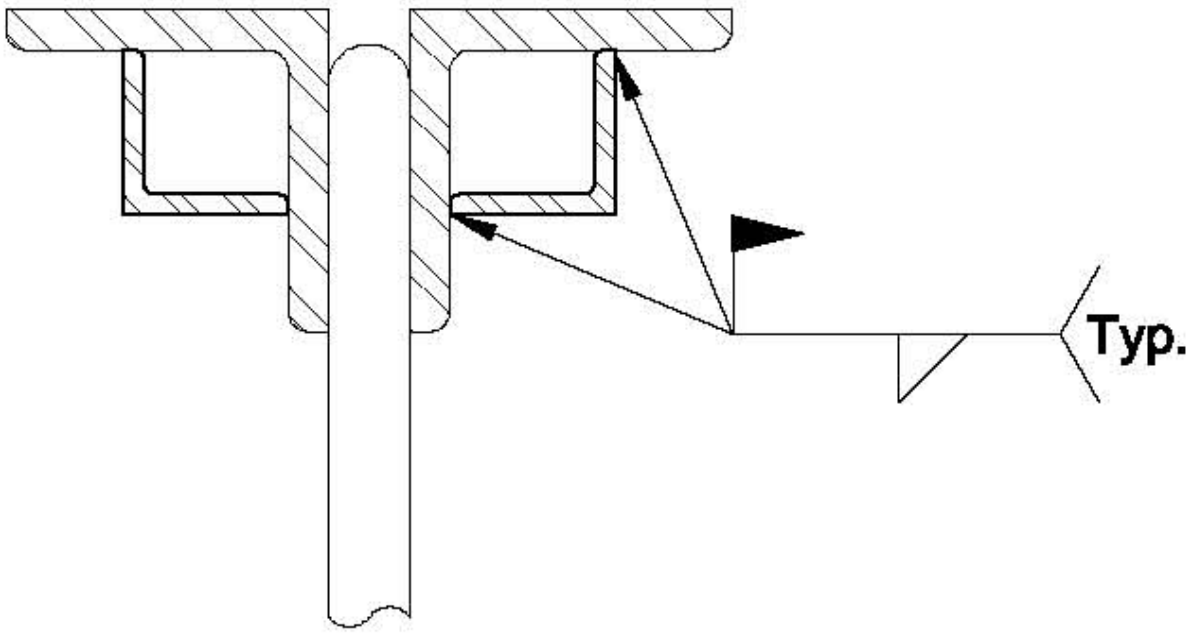

Chord Reinforcement

- **Angle Interference with Top Chord Reinforcement**



Chord Reinforcement

- **Top Chord Reinforcement – Rods**

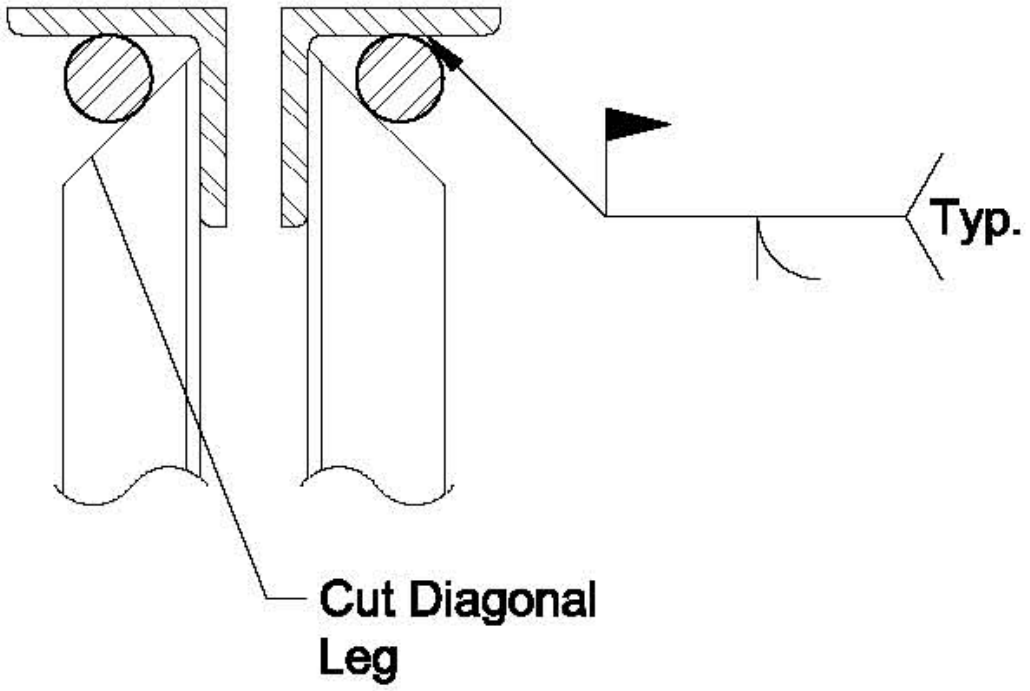

Chord Reinforcement

- **Top Chord Reinforcement Requiring Notch**

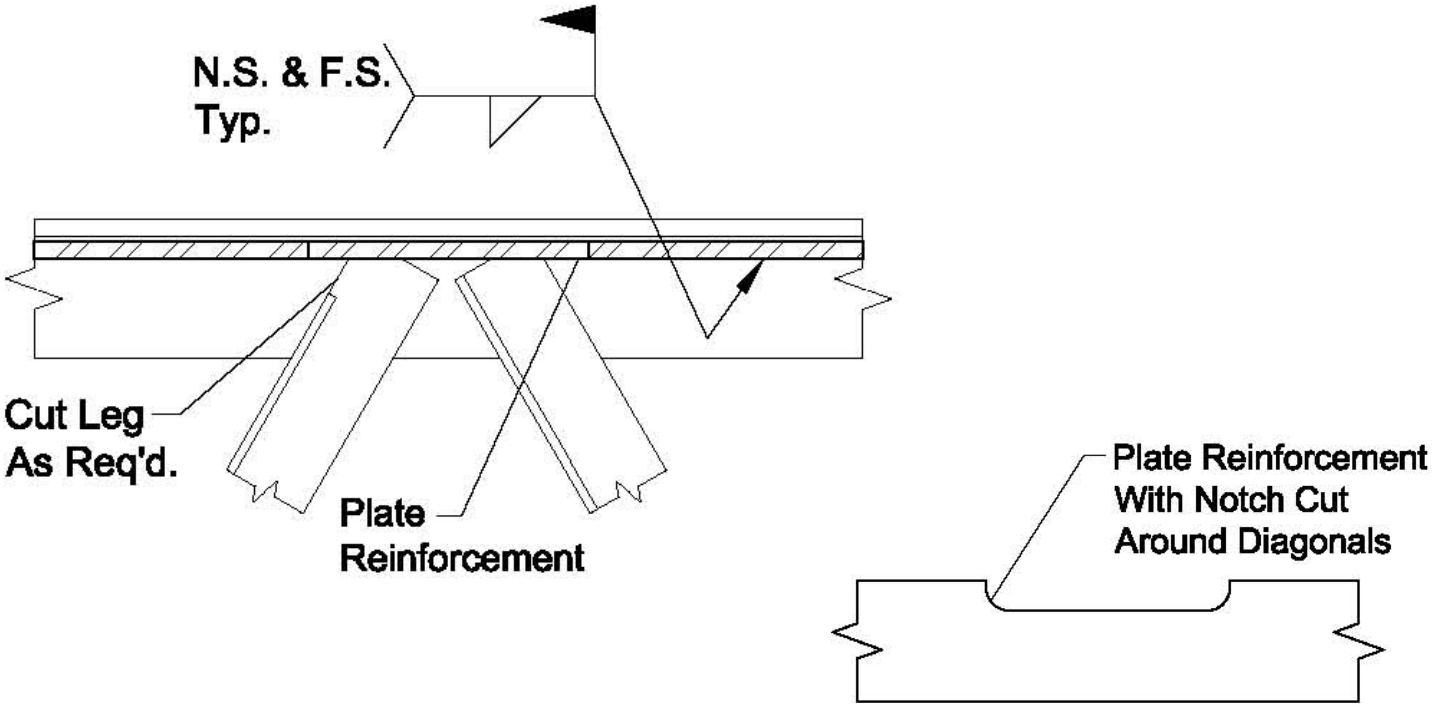

Chord Reinforcement

- **Rod Splice**

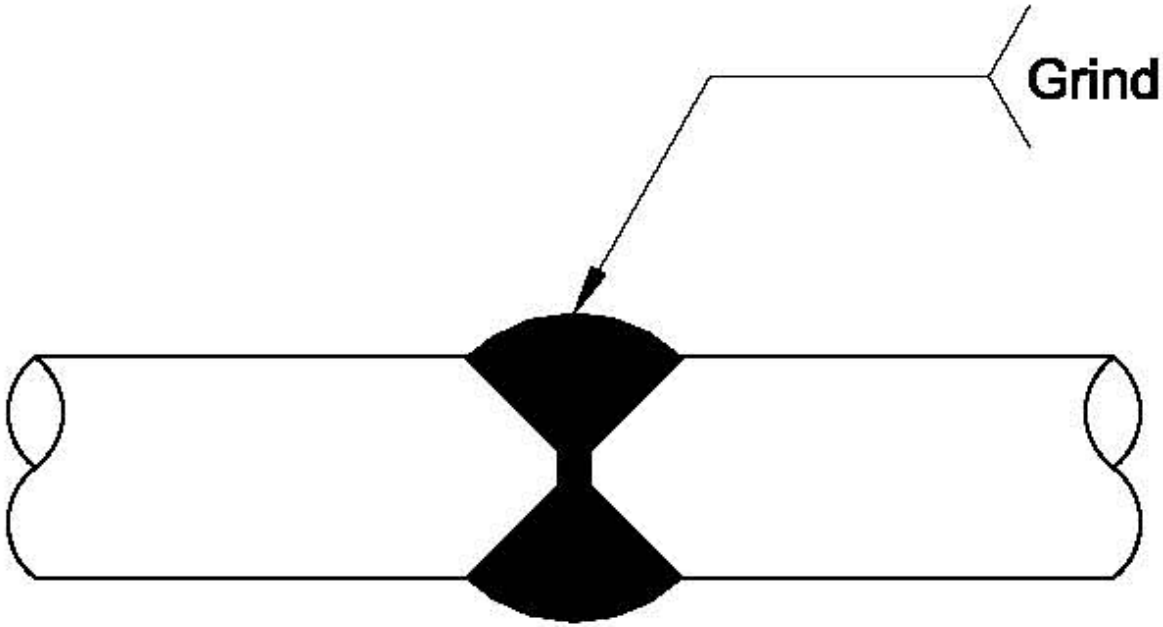

Chord Reinforcement

- **Bottom Chord Reinforcement**

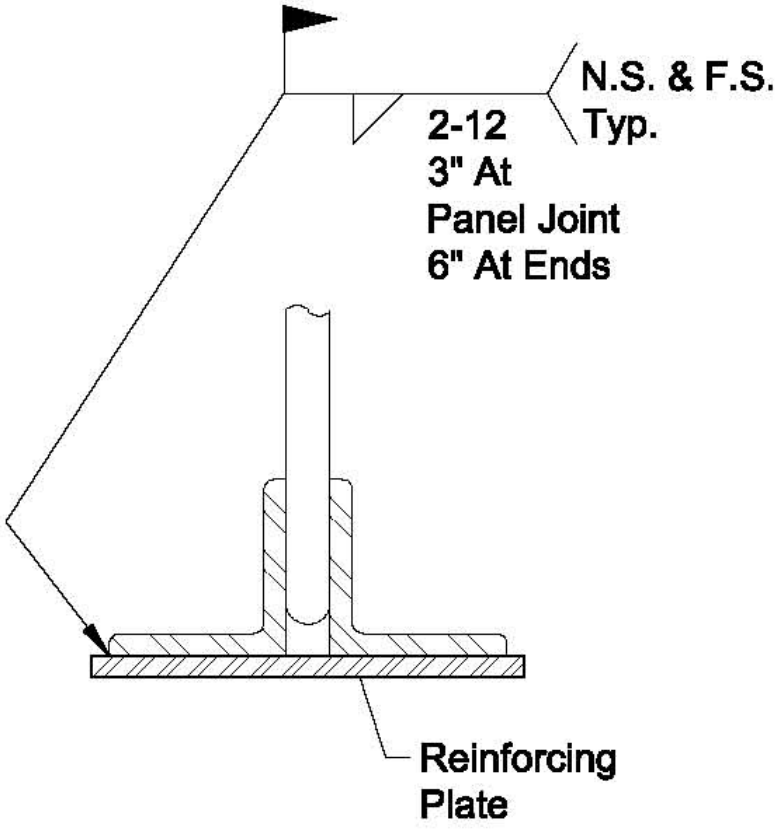

Web Weld Location

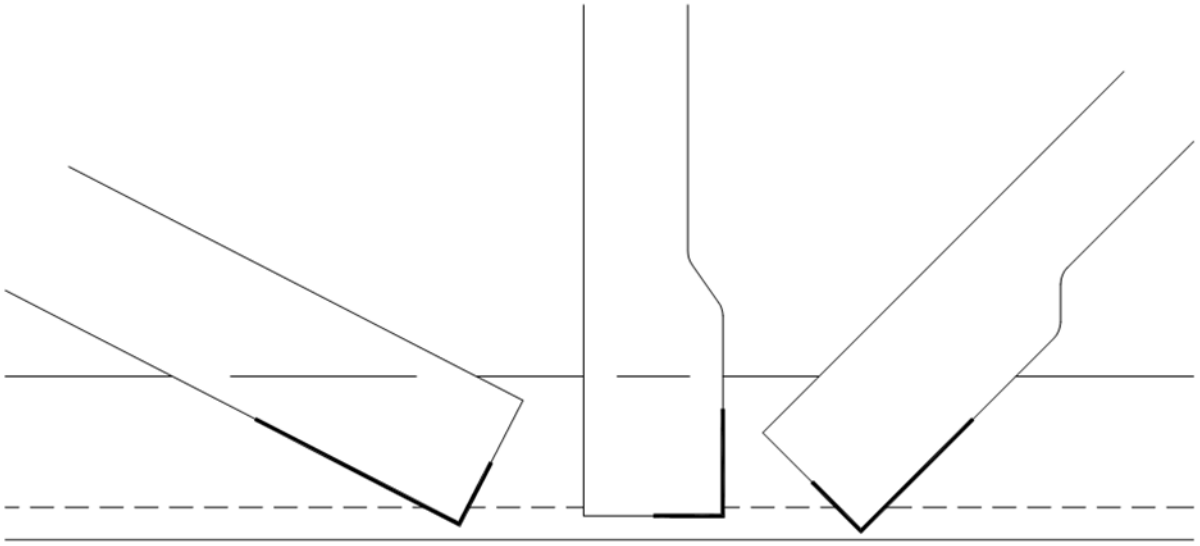

Rod Web Reinforcement

- **Angle Reinforcement on Rod Web Joist**

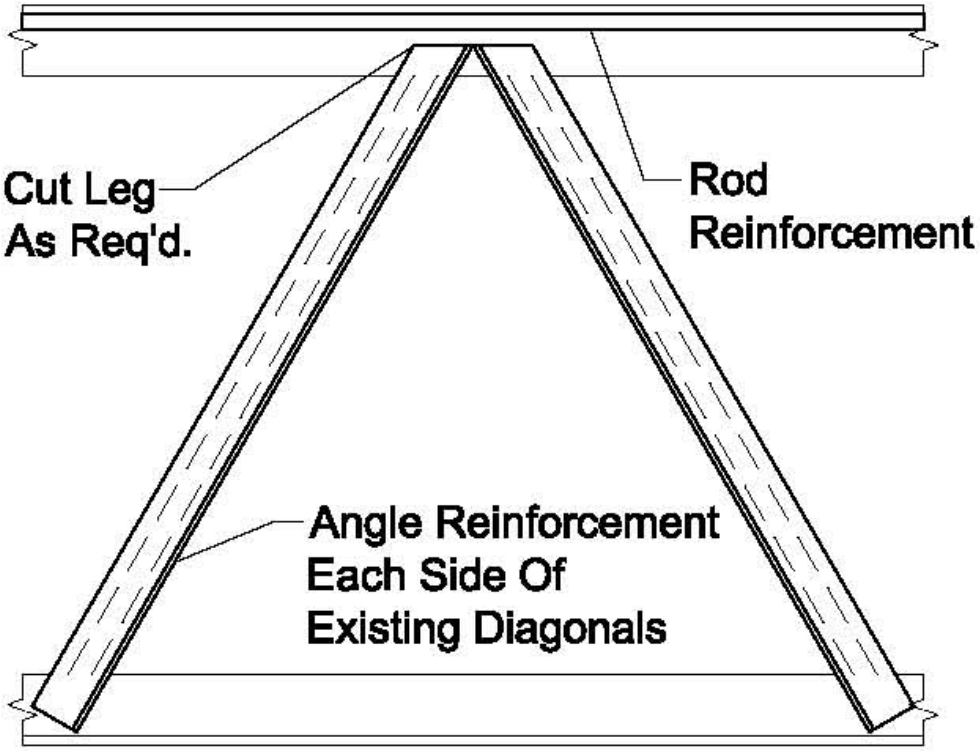

Rod Web Reinforcement

- **Angle Reinforcement on Rod Web Joist**



Crimped Web Reinforcement

- **Joist with Crimped Web Members**



Crimped Web Reinforcement

- **Angle Reinforcement on Crimped Web Joist**

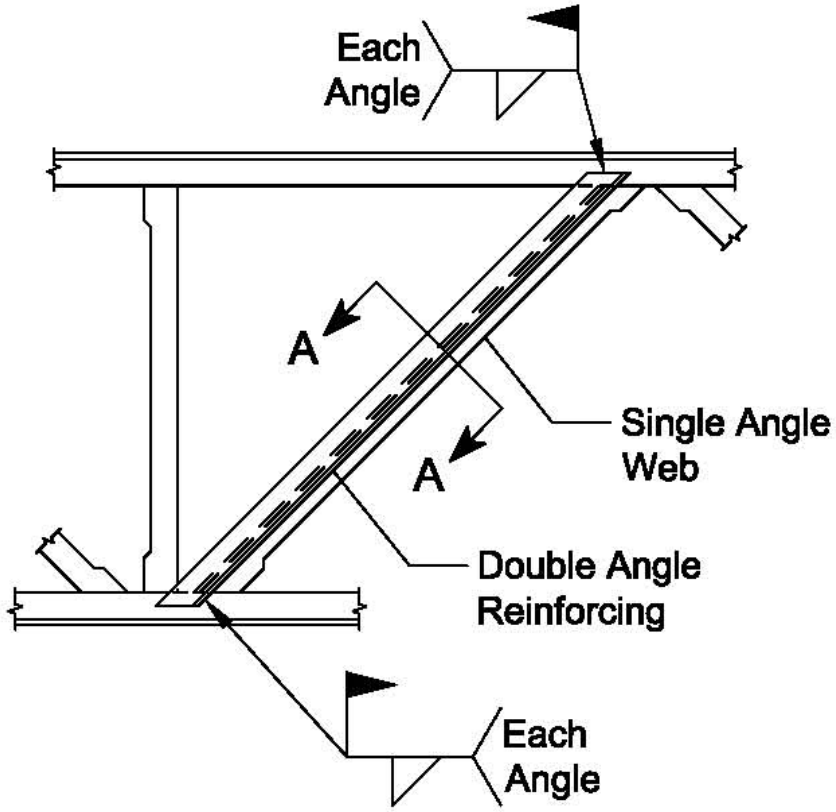

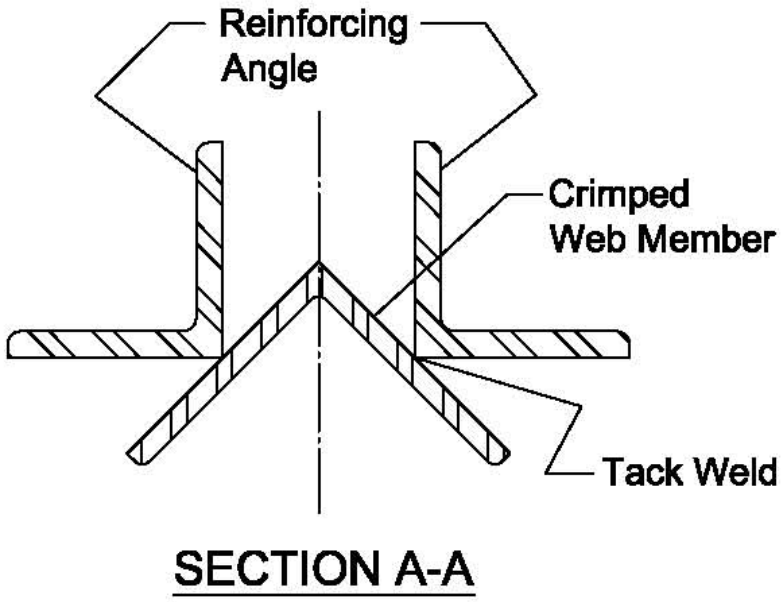

Crimped Web Reinforcement

- **Angle Reinforcement on Crimped Web Joist**



Crimped Web Reinforcement

- **Crimped Web Reinforcement**

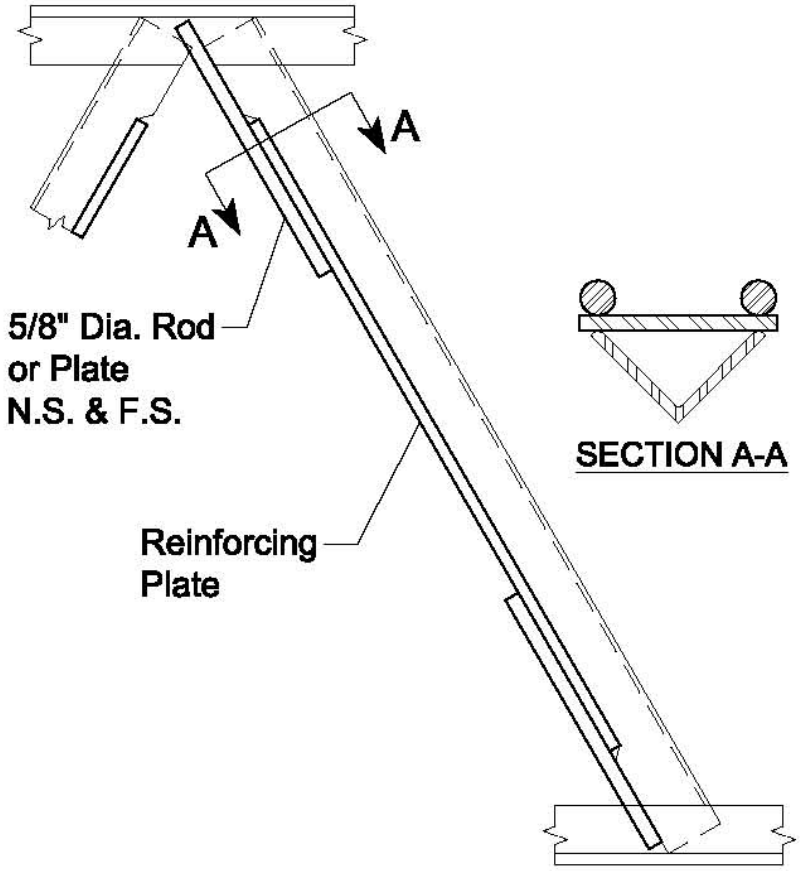

Double Angle Web Reinforcement

- **Angle Web Reinforcement with Rod**

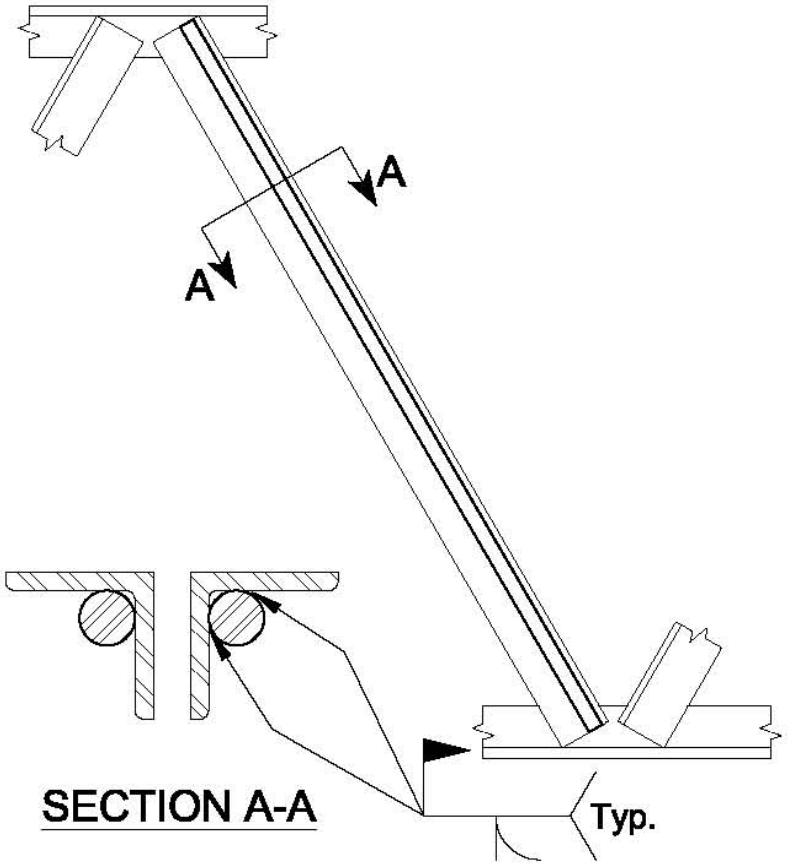

Double Angle Web Reinforcement

- **Angle Web Reinforcement with Rod**



End Diagonal Web Reinforcement

- **End Diagonal Reinforcement with Angle**

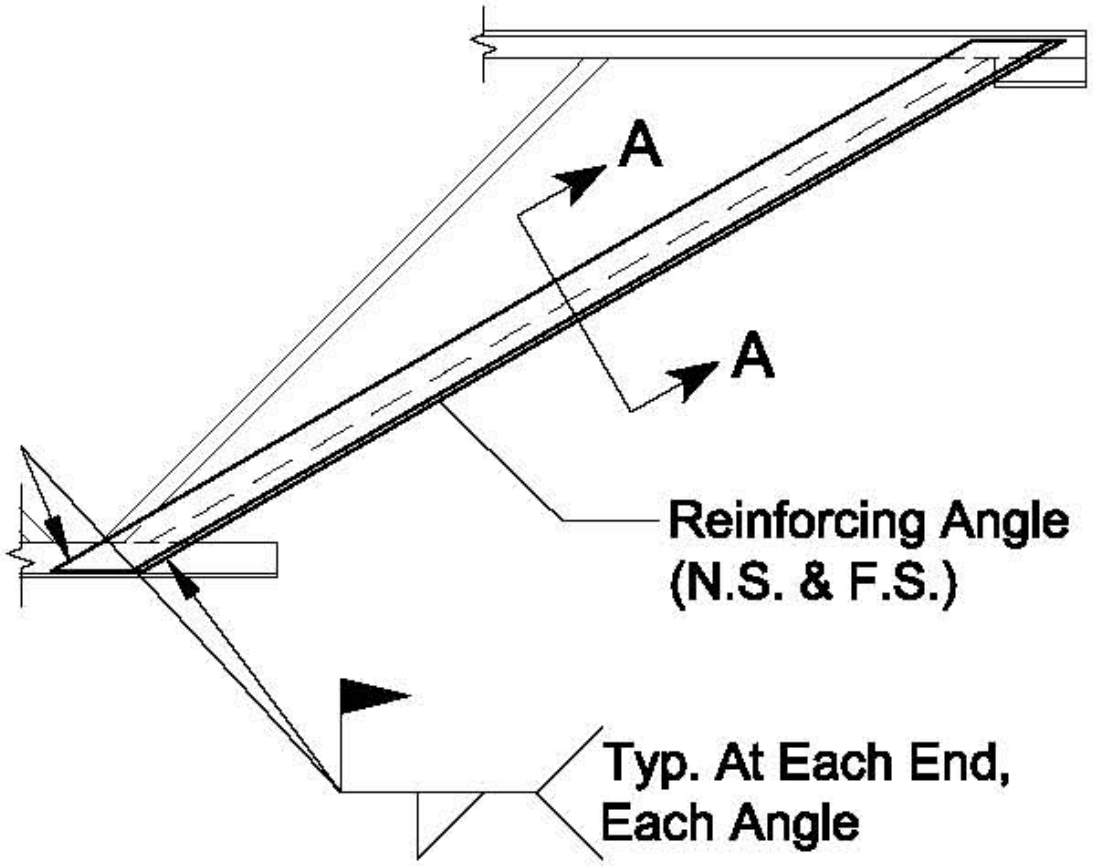

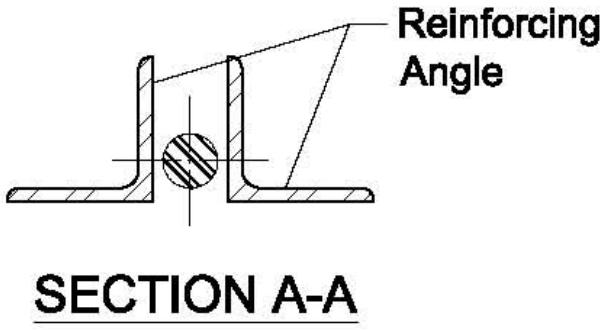

End Diagonal Web Reinforcement

- **Bar Added for Additional Weld on End Diagonal**

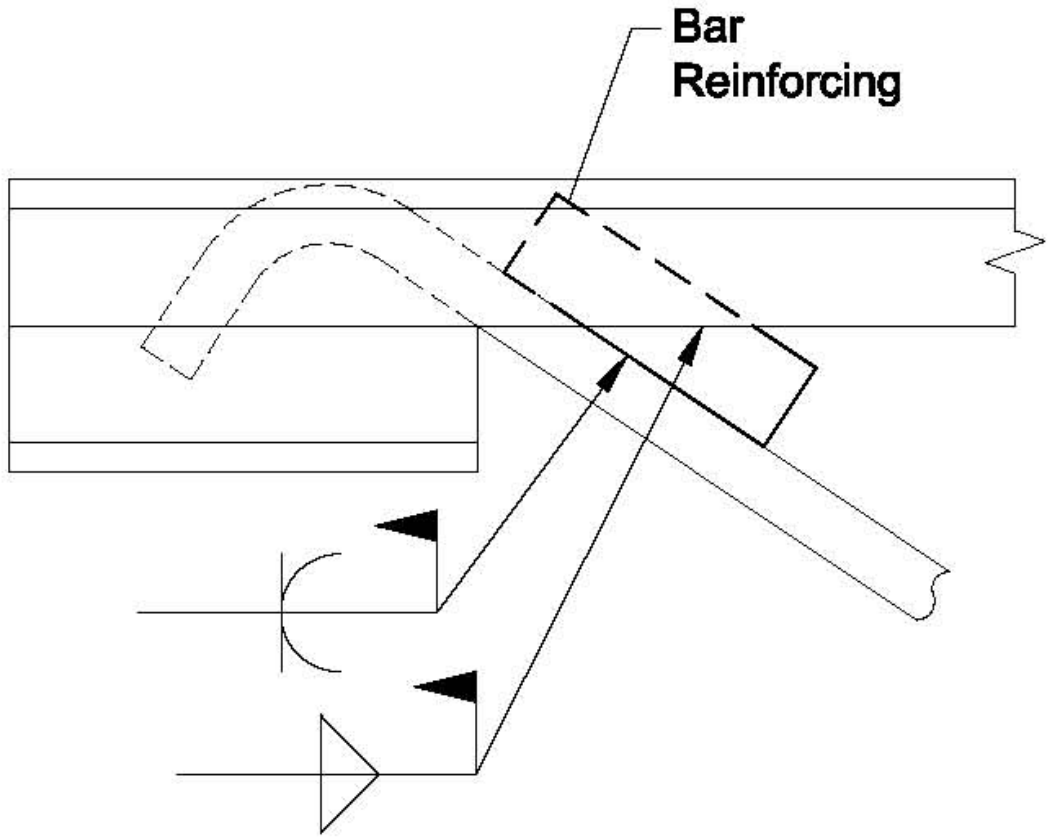

Design Examples for Strengthening Joists

Example 3.1	Strengthening a K-Series Joist with Crimped Angle Webs
Example 3.2	Strengthening a K-Series Joist with Rod Webs
Example 3.3	Strengthening an End Diagonal (W2) using Double Angles
Example 3.4	Strengthening of Joist Girder Chords
Example 3.5	Strengthening of a LH-Series Joist with Double Angle Webs
Example 3.6	Design of a Strut to Prevent Top Chord Bending between Panel Points

Example 3.5 Strengthening of a LH-Series Joist with Double Angle Webs

Given Conditions

- **A remodel requires that additional equipment be installed and supported by the joists**
- **Original joists were designated as 32LH780/440**
- **Added equipment will be centered over two joists**
  - **Resulting load is 2000 lbs located at 7’-4” and 12’-3” from the tag end of the joist**
- **Uniform loads in the designation are the uniform design loads required**
  - **Load redistribution method not a feasible solution**

Example 3.5 Strengthening of a LH-Series Joist with Double Angle Webs

- **32LH780/440 with Additional Concentrated Loads**

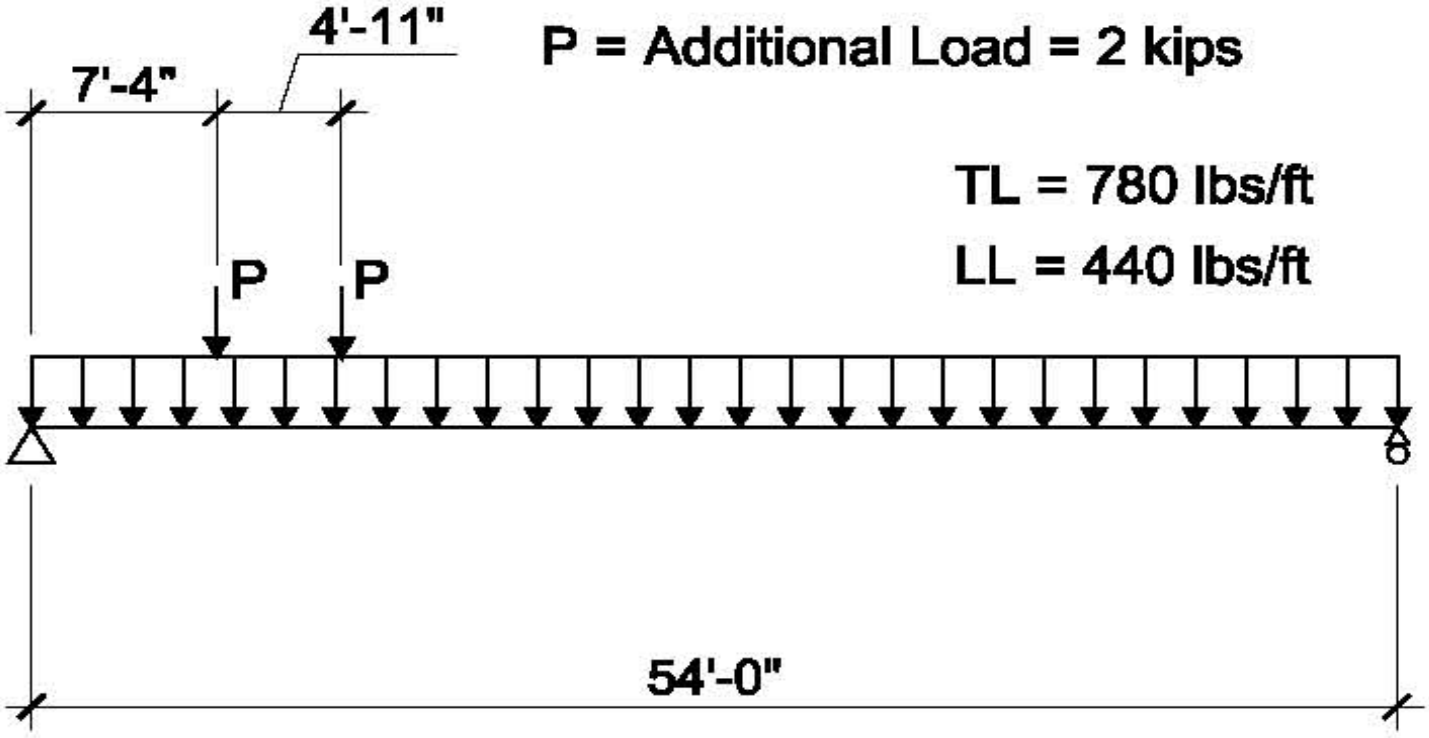

Example 3.5 Strengthening of a LH-Series Joist with Double Angle Webs

Analysis

- **Overstressed webs are double angles**
- **Axial force in the end web member (W2)**
  - **Required force = 60.5 kips**
  - **Allowable force (from manufacturer) = 56.3 kips**
- **First compression web member (W3)**
  - **Required force = 18.1 kips**
  - **Allowable force (from manufacturer) = 17.2 kips**
- **Originally designed using Allowable Stress Design**
  - **Use (ASD) for reinforcement also**

Example 3.5 Strengthening of a LH-Series Joist with Double Angle Webs

End Web Reinforcing

Load in end tension web (W2) at time of reinforcing is 23.0 kips

Total area required =

$$A_{tr} = \frac{\left(P_t - P_p\right)}{\left(P_o - P_p\right)} A_e$$

Where:

- **P_t = 60.5 kips (required force)**
- **P_p = 23.0 kips (preload force)**
- **P_o = 56.3 kips (original allowable design force)**
- **A_e = 1.876 in.2 (area of two 2 x 2 x 0.250 angles)**

Thus,

$$A_{tr} = \frac{\left(60.5 - 23.0\right)}{\left(56.3 - 23.0\right)} \left(1.876\right) = 2.113\ in.^2$$

Example 3.5 Strengthening of a LH-Series Joist with Double Angle Webs

The required area of reinforcing =

$$A_r = A_{tr} - A_e = 2.113 - 1.876 = 0.237\ in.^2$$

Add round rods for reinforcement

Two ¾" diameter rods placed in heel of angles

Area of furnished reinforcing,

$$A_{fr} = \frac{2\pi d^2}{4} = \frac{2\pi (0.75)^2}{4} = 0.884\ in.^2$$

> 0.237 in²

Therefore, OK

The total area, At, is the sum of the areas of the existing web angles plus the areas of the reinforcing rods,

$$A_t = A_e + A_{fr} = 1.876 + 0.884 = 2.760\ in.^2$$

Example 3.5 Strengthening of a LH-Series Joist with Double Angle Webs

The force in the reinforcing members equals

$$P_r = \left(\frac{A_{fr}}{A_t}\right)\left(P_t - P_p\right) = \left(\frac{0.884}{2.760}\right)\left(60.5 - 23.0\right) = 12.01\ kips$$

Check the stress in the round rod reinforcing member:

F = P/A =12.01/0.884 = 13.59 ksi < 21.6 ksi

Therefore, the use of A36 material is OK

Example 3.5 Strengthening of a LH-Series Joist with Double Angle Webs

End Web Reinforcing Weld Design

- **Joint between Rod and Angle will be a partial-joint-penetration groove weld.**
- **Effective throat thickness of 5/16 times the rod radius.**
  (AISC Specification Table J2.2 for Flare Bevel Groove weld)
- **Effective throat = ((5/16 x 3/4”)/2) = 0.117 in.**

Example 3.5 Strengthening of a LH-Series Joist with Double Angle Webs

- **Allowable shear per weld using E70 electrodes from AISC Table J2.5, Available Strength of Welded Joints is 2.46 kips/in.**
- **The total length of weld required to develop the force in each rod =12.01 / 2.46 = 4.88 in.**
- **The 6 in. of weld shown in the following figure, at the ends of each reinforcing rod, is more than adequate.**

Example 3.5 Strengthening of a LH-Series Joist with Double Angle Webs

- **Reinforcing End Diagonals**

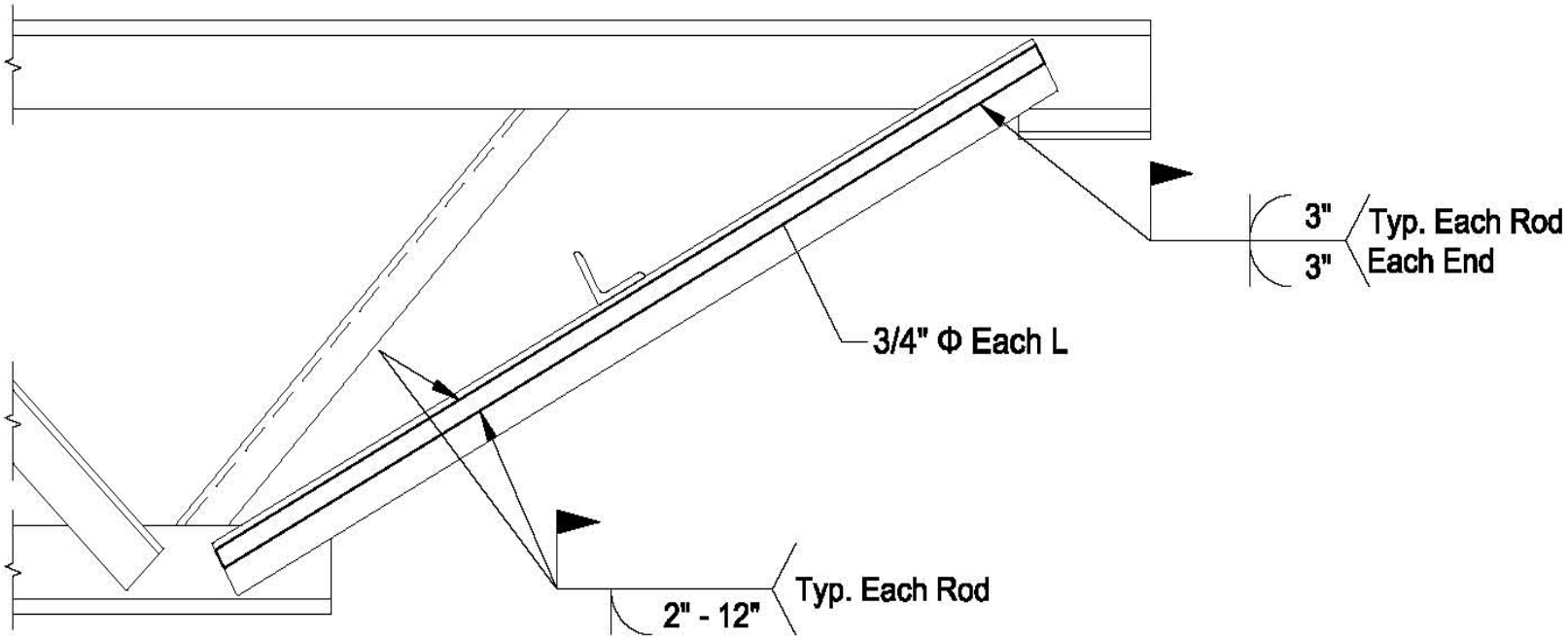

Example 3.5 Strengthening of a LH-Series Joist with Double Angle Webs

End Web Weld Design for Total Required Force

Pt = 60.5 kips
Based on 3/16” fillet weld and using E70 electrodes, the allowable shear per inch of weld equals:
(0.707)(0.188 in.)(21 ksi) = 2.79 kips/in.

Thus, 60.5/2.79 = 21.7 in.
(use 11 in. at each end of each web angle)

Example 3.5 Strengthening of a LH-Series Joist with Double Angle Webs

Check for Tensile Rupture

Conservatively, U can be taken as 0.6 or can be determined from AISC Specification Table D3.1, Shear Lag Factors for Connections to Tension Members.

When Case 2 is selected,

$$U = 1 - \frac{\bar{x}}{\ell} \qquad Case\ 2$$

U depends on the weld arrangement. AISC does not address the condition of unequal weld lengths on the heel and toe of the angle so use the length along the heel.

Assume that 4 in. of weld is placed on the heel, 7 in. along the toe.

Example 3.5 Strengthening of a LH-Series Joist with Double Angle Webs

Check for Tensile Rupture

Where: $\overline{X}$ **is the centroid location for the composite section comprised of web angle plus the round rod**

l **is the length of the connection**

$$\overline{X} = (0.25 + 0.375) = 0.625in.$$

$$l = 4in.$$

$$U = 1 - \frac{0.625}{4} = 0.844$$

Example 3.5 Strengthening of a LH-Series Joist with Double Angle Webs

The nominal strength P_n based on tensile rupture equals F_uA_e or UF_uA_t

Fu = 65 ksi since the weld is placed on the angle

$$P_n = U F_u A_t = (0.844)(65)(2.760) = 151.4 \; kips$$

$$P_{available} = \frac{P_n}{\Omega_t} = \frac{151.4}{2.00} = 75.71 \; kips$$

> 60.5 kips Therefore, OK

Example 3.5 Strengthening of a LH-Series Joist with Double Angle Webs

First Compression Web Reinforcing

Design Approach II:

1. **Select a trial reinforcing member.**
2. **Check the buckling strength of the composite member.**
   a. **Determine the magnitude of the compressive stress in the existing member due to the preload, f_p**
   b. **F_{ye} = minimum yield stress of existing member, ksi**
   c. **For the buckling check, use F_y as the minimum of $(F_{ye} - f_p)$ or F_y**
3. **Design the weld for the reinforcing member. The force in the weld is**

$$P_{rw} = \left(\frac{A_{fr}}{A_t}\right)\left(P_t - P_p\right)$$

Example 3.5 Strengthening of a LH-Series Joist with Double Angle Webs

First Compression Web Reinforcing (cont'd)

The req'd load in the first compression web (W3) is 18.1 kips

Trial reinforcing member.

- **Try 2- ¾" diameter rods, F_y = 36 ksi**

Determine the section properties for web angles, rods, and combined.

1 - L1.5x1.5x0.138	1 - ¾" Rod	Combined 2-L & 2 rods
A_e = 0.395 in.^{2}	A_{fr} = 0.442 in.^{2}	A_t = 1.674 in.^{2}
r_x = 0.463 in.	r = 0.188 in.	r_t = 0.350 in.

Example 3.5 Strengthening of a LH-Series Joist with Double Angle Webs

- **Double Angle Reinforcing with Rod**

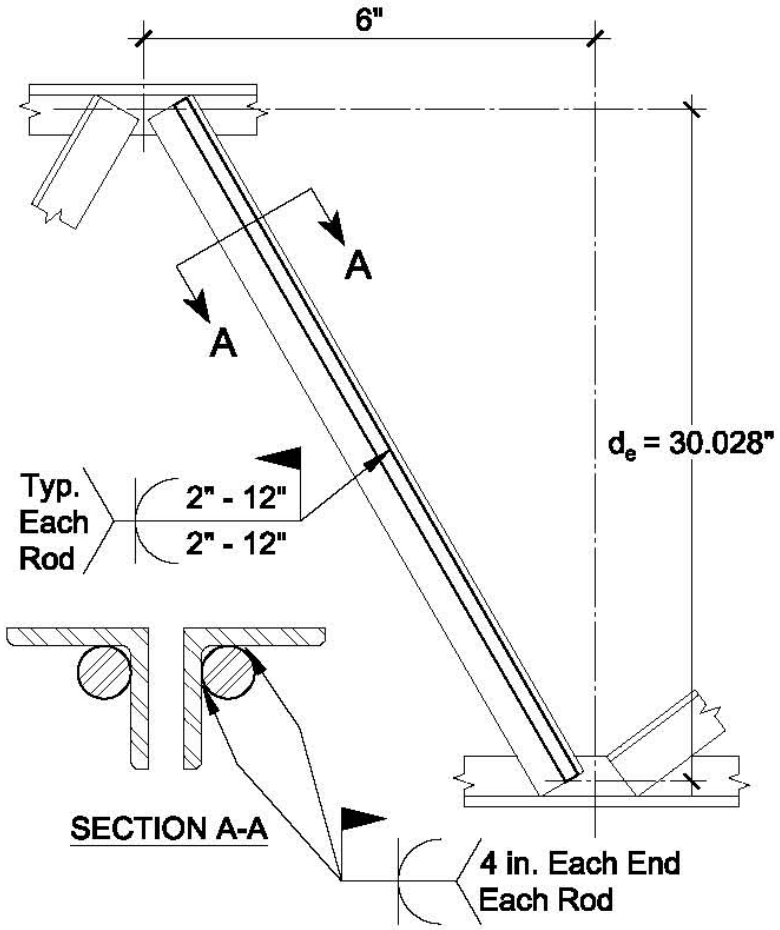

Example 3.5 Strengthening of a LH-Series Joist with Double Angle Webs

Check buckling strength of the composite section

For compression webs, the allowable load is determined using AISC Specification Chapter E.

$$P_c = F_a A_t$$

Where,

P_c is the allowable compressive strength, P_n/Ω_c , kips

F_a is the allowable compressive stress, F_{cr}/Ω_c , ksi

A_t is the composite member cross-sectional area, in.^{2}

Safety factor, $\Omega_c = 1.67$

Example 3.5 Strengthening of a LH-Series Joist with Double Angle Webs

Check buckling strength of the composite section (cont'd)

Determine the yield stress to be used:

Preload, P_p = 6.9 kips

$$f_p = \frac{6.9}{(2)(0.395)} = 8.73\ ksi$$

Yield stress to be used is the minimum of:

$F_{ye} - f_p = 50 - 8.73 = 41.27$ ksi

F_y = 36 ksi for the rods **Thus, use 36 ksi**

Example 3.5 Strengthening of a LH-Series Joist with Double Angle Webs

Check buckling strength of the composite section (cont'd)

Determine form factor, Q_s, per AISC E7-1(c).

The calculation for the *unstiffened element* can be done using b, the full angle leg size, or b', the actual *unstiffened element* length as shown in the figure below.

Using b = 1.5 will yield Q_s = 1.0

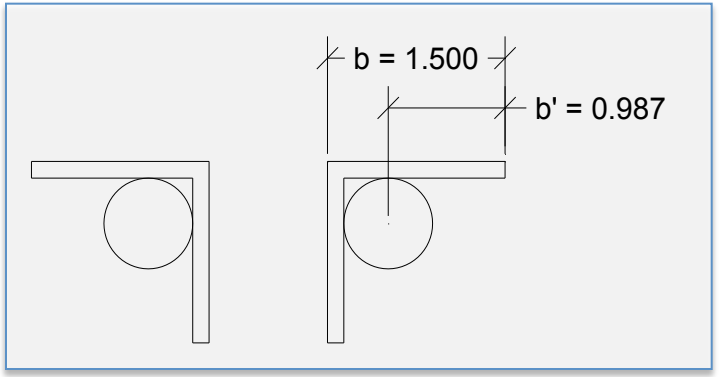

Example 3.5 Strengthening of a LH-Series Joist with Double Angle Webs

Check buckling strength of the composite section (cont'd)

Compute Slenderness Ratio of Composite Section:

$$L = \sqrt{(6)^2 + (30.028)^2} = 30.62\ in.$$

$$\frac{L}{r} = \frac{30.62}{0.350} = 87.49 < 4.71\sqrt{\frac{29000}{36}} = 133.68$$

$$F_e = \frac{\pi^2 (29000)}{\left(\frac{30.62}{0.350}\right)^2} = 37.39\ ksi$$

Example 3.5 Strengthening of a LH-Series Joist with Double Angle Webs

Check buckling strength of the composite section (cont'd)

(AISC E3-2)

$$F_{cr} = \left[0.658^{\frac{36}{37.39}}\right] 36 = 24.06\ ksi$$

The available axial compressive stress is:

$$F_a = \frac{F_{cr}}{\Omega_c} = 14.41\ ksi$$

The available compressive force is:

$$P_c = (14.41)(1.674) = 24.12\ kips > 18.1\ kips\ required$$

Therefore, OK

Example 3.5 Strengthening of a LH-Series Joist with Double Angle Webs

Design the Welds

Total force in the welds is determined by

$$P_{rw} = \left(\frac{A_{fr}}{A_t}\right)\left(P_t - P_p\right)$$

Or,

$$P_{rw} = \left(\frac{0.884}{1.674}\right)\left(18.1 - 6.9\right) = 5.91\ kips$$

Each of the 3/4” rods has an allowable force of:

(14.41)(0.442) = 6.37 kips

Therefore, use this force for weld design.

Example 3.5 Strengthening of a LH-Series Joist with Double Angle Webs

End Web Reinforcing Weld Design

Joint between Rod and Angle will be a partial-penetration flare bevel groove weld.
Effective throat thickness of 5/16 x rod radius (AISC Spec. Table J2.2)
Effective throat = (5/16 x 0.75/2) = 0.117 in.
Allowable weld shear using E70 electrodes is
0.3 x 70.0 x 0.117 = 2.46 kips/in.
The total req'd weld length to develop the force in each rod is
6.37 / 2.46 = 2.59 in.

Example 3.5 Strengthening of a LH-Series Joist with Double Angle Webs

End Web Reinforcing Weld Design (cont'd)

- **Use 4 in. of weld at each end as shown in the figure.**
  And
- **Stitch weld round rods 2" @ 12" on center.**

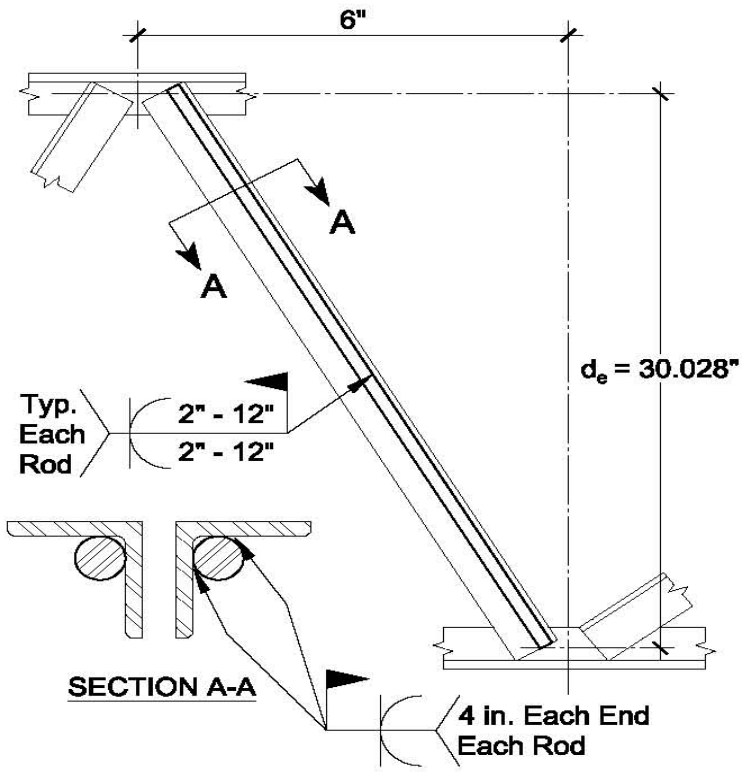

Example 3.5 Strengthening of a LH-Series Joist with Double Angle Webs

Check Buckling of the Reinforcing between Welds
L = weld spacing – weld length = 12 – 2 = 10 in.
Slenderness ratio of the rod is:

$$\frac{L}{r} = \frac{10}{0.187} = 53.4$$

$$F_e = \frac{\pi^2 (29000)}{\left(\frac{10}{0.187}\right)^2} = 100.09 \; ksi$$

(AISC E3-2)

$$F_{cr} = \left[0.658^{\frac{36}{100.09}}\right] 36 = 30.97 \; ksi$$

The available axial compressive stress is:
The available compressive force is:

$$F_a = \frac{F_{cr}}{\Omega_c} = \frac{30.97}{1.67} = 18.54 \; ksi$$

$$P_c = (18.54)(1.674) = 31.04 \; kips > 18.1 \; kips \; required$$

Therefore, OK

Chapter 4: Design Approaches for Modifying Joists – Shortening & Lengthening

Factors to Consider

- **Even a small increase in length can cause a considerable increase in chord forces**
- **Web stress reversals may occur**
- **Joist camber may be adversely affected**
- **Removal of any main web member**
- **Steps must be taken during modification to maintain camber**
- **It may often be less expensive to obtain new joists**

Design Approaches for Modifying Joists – Shortening & Lengthening

Factors to Consider (cont'd)

- **Shortening generally does not require chord reinforcement**
  - **Typically requires new bearing seats and end webs**
  - **An unacceptable practice is to cut the end of the top chord and bend the existing end web back up to the top chord**

Design Approaches for Modifying Joists – Shortening & Lengthening

Factors to Consider (cont'd)

- **Lengthening requires the addition of reinforcing of the top chord and the web members**
  - **A splice at the joist center reduces the web splice requirement**
  - **A splice at the joist end panel reduces the chord splice requirement but may require web reinforcement**
  - **A splice at both end panels generally requires no web reinforcement**
- **If possible, relocate or change the support for the joists so that joist modification is not necessary**

Design Approaches for Modifying Joists – Shortening & Lengthening

Steps to Shorten Open Web Steel Joists

1. **Steps to Shorten Open Web Steel Joists**
   a. **Determine the original web layout**
   b. **Top chord end panel length**
   c. **Interior panel length**
   d. **Number of panels**
2. **Determine where shortened length occurs relative to top chord panels**
   a. **New end web originates from a bottom chord panel point**
   b. **Placement angle should be 45 to 70 degrees**
3. **Determine the loading at the shortened length**

Design Approaches for Modifying Joists – Shortening & Lengthening

Steps to Shorten Open Web Steel Joists (cont'd)

4. **Perform a design on the new length**
   a. **Compare material required for new length to material for the as-built length**
   b. **Reinforce undersized existing webs as needed**
5. **Place new bearing seat at the desired location**
   a. **Typically a pair of angles welded between top chord angles**
6. **Determine the new end web force**
   a. **Typically an end web consists of two new angles**
   b. **Round bars may also be used on smaller K-Series joists with 2 ½" bearing seats**

Design Approaches for Modifying Joists – Shortening & Lengthening

Steps to Lengthen Open Web Steel Joists

1. Determine the original web layout
   a. Top chord end panel length
   b. Interior panel length
   c. Number of panels
2. Determine where lengthening length occurs relative to top chord panels
   a. Limited to how much length can be added by
      i. Slenderness ratio of new web
      ii. Long end panel may govern top chord size
3. Determine the loading at the increased length

Design Approaches for Modifying Joists – Shortening & Lengthening

Steps to Lengthen Open Web Steel Joists (cont'd)

4. **Perform a design on the new length**
   a. **Compare material required for new length to material for the as-built length**
   b. **Reinforce chords and webs as required**
5. **Place and weld new top chord angles**
   a. **Use pre-qualified butt weld per AWS or**
   b. **Splice with new material and a weld sized to develop adequate strength**

Design Approaches for Modifying Joists – Shortening & Lengthening

Steps to Lengthen Open Web Steel Joists (cont'd)

6. **Place new bearing seat at the desired location**
   a. **Typically a pair of angles welded between top chord angles**
7. **Determine the new end web force**
   a. **Typically an end web consists of two new angles**
   b. **Round bars may also be used on smaller K-Series joists with 2 ½" bearing seats**

Example 4.1 Shortening of a K- Series Joist

Given Conditions

- **A 39’-10 ½” long 24K8 joist is to be shortened by 10”**
- **Approximate angle of new end web:**

  Ø = arctan (48-10-2)/24 = 56.3 degrees

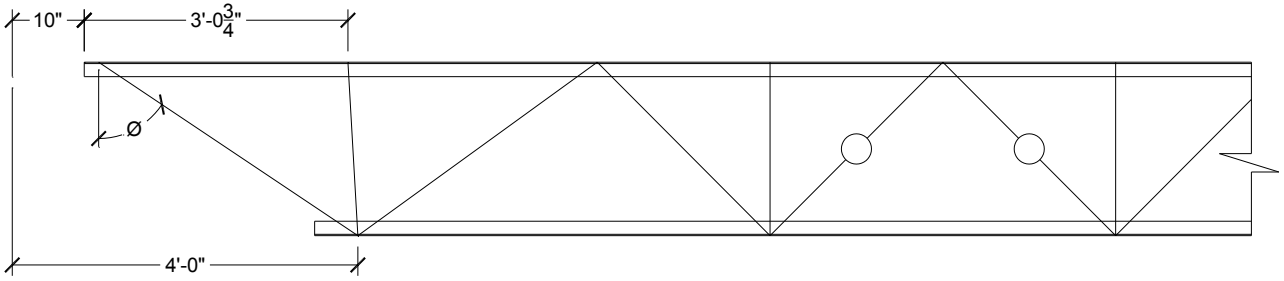

Joist to be Shortened

Example 4.1 Shortening of a K- Series Joist

Analysis and modification

- **From the Standard ASD Load Table for Open Web Steel Joists, K-Series**
  - **New total safe uniformly distributed load capacity = 293 plf**

- **Analysis shows the two circled webs are overstressed**
  - **Reinforce as needed**
  - **Webs are crimped angle web members**
    - **Reinforce with a pair of angles on the outside of the chords**

Example 4.1 Shortening of a K- Series Joist

Analysis and modification (cont'd)

- **A new bearing seat is required**
- **Top chord angles are separated by a 1" gap**
  - **Use 2 - L2x2x3/8" angles 4" long are welded back-to-back to form a 2 ½" deep seat as shown in Fig. 1, or**
  - **Use 2 - L2x2x¼ angles w/ a ½" spacer plate as shown in Fig. 2.**

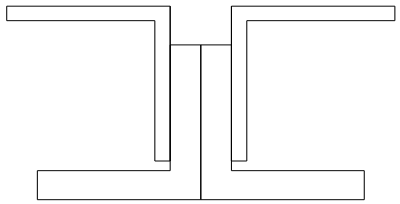

Fig. 1

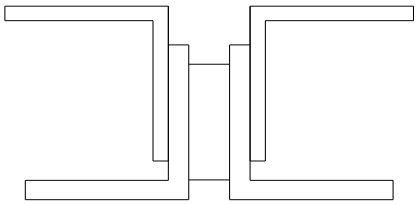

Fig. 2

Example 4.1 Shortening of a K- Series Joist

Analysis and modification (cont'd)

- New end web force is 10,050 lbs
  - New end web length is 37.7 in.
    - Based on clear length between 2" top chord and 1 ¾" bottom chord
  - A pair of 3/4" round bars will satisfy the strength and slenderness criteria
    - L/240 per SJI Specifications for K-Series joists
  - Using E70XX electrodes
    - Flare-bevel groove weld strength with 3/4" rounds = 2.46 kips/in.
    - 10,050/2.46 = 4.1" or 2 ¼" weld at each end of each bar

Example 4.1 Shortening of a K- Series Joist

- **Reinforcing Detail**

Joist Marks: J22
Total Pcs: 1

Exist O.A.L.: 39'-10 1/2"
Req'd O.A.L.: 39'-00 1/2"

Work Description: Shorten joists 0'-10" by removing top chord.

If work is performed at tag ends leave tag in place.

1. At bottom chord, cut existing end web 2" above top of angles.

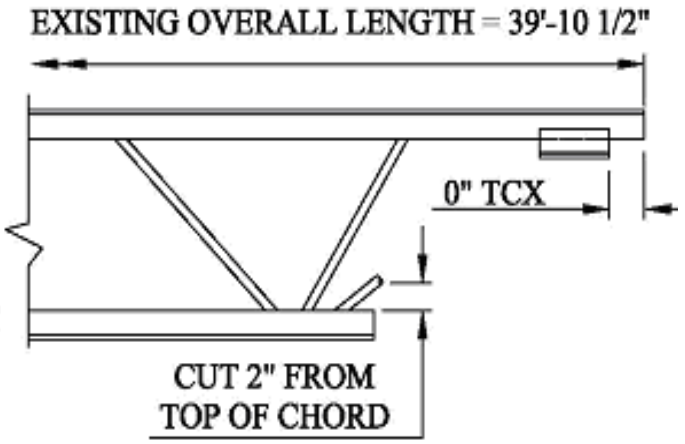

Example 4.1 Shortening of a K- Series Joist

- **Reinforcing Detail (cont'd)**

2. At top chord, cut top chord back 10" removing web and chord bearings.

3. Place new bearing angles, 2 x 2 x 3/8 x 0'-4". Weld angles to top chords. See Section A-A.

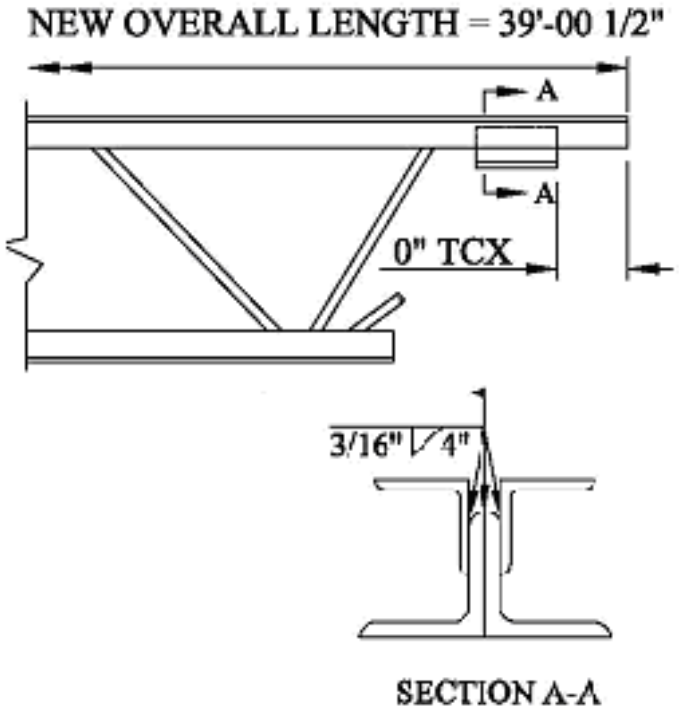

Example 4.1 Shortening of a K- Series Joist

- **Reinforcing Detail (cont'd)**

4. Place two (one each side) new end web members, 3/4" rounds. Provide a minimum of 2 1/4" of flare bevel weld at the end of each new end web (total of 4 1/2" for two rounds). Be sure to note placement of new end webs such that the working axis of the end webs is over the first bottom chord knuckle.

Notes:

All weld to be made with E70XX electrodes.
All fillet weld leg lengths equal to new angle thicknesses.
All new material to have a minimum yield strength of $F_y = 36$ ksi.
All welds to be performed by a welder certified to A.W.S. for welds and positions required.
Sketches not to scale.

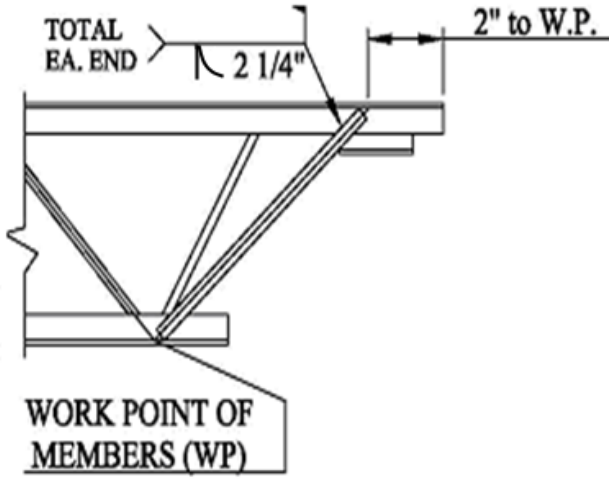

Chapter 5: Other Considerations

Other Important Considerations

- **Deflections**
- **Camber**
- **Effects of added loads on bridging**
- **Creating two joists from one**

Other Considerations

Deflections

- **Deflection control is often required in addition to strengthening joists for load**
- **Project deflection requirements must be considered**
  - **A live load deflection less than L/240 may not be met if a joist is only strengthened for added loads from a snow drift.**

Other Considerations

Camber

- **When shortening or lengthening a joist, camber needs to be maintained whenever removing any web members**

Effects of Added Loads on Bridging

- **Bridging may need to be added or altered**
  - **Providing lateral support to compression chord members is critical**
  - **Bottom chord may also be subjected to compression due to uplift**
- **Designer is to refer to the SJI Specifications for bridging requirements**

Other Considerations

Creating Two Joists from One

- **Similar to shortening a joist**
- **Due to increased shear and stress reversals**
- **Many of the webs likely will require reinforcement**

Other Examples included in the Digest

- **Example 5.1 Changing the Natural Frequency of a Joist System**
- **Example 5.2 Reducing the Deflection of a Joist Girder**

Chapter 6: Summary

Approaches have been Presented for the Modification and Strengthening of Joists

- **Several types of reinforcing members presented along with attachment details**
- **Procedures and details do not constitute an exhaustive list of how to reinforce**

They provide the designer with ideas and concepts to solve individual modification and strengthening requirements

SJI Live Webinars

SJI is now offering in-person presentations with PDH/CEU credits awarded to participants

Topics offered include:

- **Design of Steel Joist Roofs to Resist Uplift**
- **Steel Joist Floor Systems – Best Practices**
- **Joists 101 – Intro to Steel Joist Construction**
- **Design of Lateral Load Resisting Systems Using Steel Joists & Joist Girders**
- **Evaluation and Modification of Open Web Steel Joists & Joist Girders**

Go to https://steeljoist.org/resources/sji-presents-form/ for more information

Questions?

www.steeljoist.org



THANK YOU

Copyright © 2016 Steel Joist Institute. All Rights Reserved.